ROTTLER

MANUFACTURING

VR8

Centerless Valve Grinder Machine

Serial No.: _____

Company: _____

OPERATIONS AND MAINTENANCE
MANUAL

MANUFACTURED BY:

ROTTLER MANUFACTURING COMPANY
8029 South 200th Street ~ Kent, Washington 98032 USA
Phone: (253) 872-7050 ~ Fax: (253) 395-0230
Website: www.rottlermfg.com

NOTE: WHEN ORDERING REPLACEMENT PARTS,
PLEASE GIVE THE MODEL AND SERIAL NUMBER.

ORDER BY PART NUMBER.

THERE IS A MINIMUM ORDER OF $25.00


ROTTLER
VR8
ROTTLER

Chapter 1 Introduction/Safety/Installation:

Introduction:

This manual is arranged into sections as listed in the table of contents.

The present Instruction manual constitutes a part of the supply. Read it carefully, giving particular attention to the warnings and recommendations related to the safety norms and fixtures.

The Controls Definition and Operating Instructions chapters should be read very carefully in order to familiarize the user with the actual button pushing sequences required to carry out a job. These chapters in the manual should be considered an introduction.

Limited Warranty:

Rottler Manufacturing Company Model **VR8** parts and equipment is warranted as to materials and workmanship. This limited warranty remains in effect for one year from the date of delivery, provided the machine is owned and operated by the original purchaser and is operated and maintained as per the instructions in the manual.

Tools proven to be defective within the warranty period will be repaired or replaced at the factory's option.

The products are warranted upon delivery to conform to their published specifications and to be free from defects in material and workmanship under normal use for a period of one year from shipment. Should a product not be as warranted, Rottler sole obligation shall be, at its option, to repair, correct or replace the product or to refund the amounts paid for the Product upon its return to a location designated by Rottler. No warranty shall extend to rapid wear Products (including tooling) or to Products which have been subject to misuse (including any use contrary to Rottler instructions), neglect, accident (including during shipment), improper handling or installation, or subject to any modification, repair or service not certified by Rottler. Rottler shall not be liable for any consequential, direct or indirect damages or for any other injury or loss. Buyer waives any right, beyond the foregoing warranty, to make a claim against Rottler. No warranty is provided for any Products not paid in full.

Merchandise cannot be returned to Rottler without prior approval. Customer must contact the Order Department or representative to get approval and to be issued a Return Goods Authorization number **(RGA #).** Merchandise authorized for return must be returned prepaid. If merchandise is returned with shipping charges collect, the actual amount of these charges may be deducted from any credit which may be due the customer. The RGA # assigned by the Order Department should be written on the shipping label and must appear on a copy of the invoice(s) covering the original shipment. This invoice copy must be included in the box with the parts. Shipment must contain ONLY those items on the **RGA** as approved for return. Merchandise must be received within 10 days of the date of **RGA** or the **RGA** will be cancelled. All returned merchandise may be subject to a 20% restocking fee on under $10,000.00 amount or 10% on any items over $10,000.00. Parts or tooling over 30 days old are considered as customer property and can only be returned with prior written approval from Rottler Corporation Management and/or Shipping Department.

The issuance of a **RGA DOES NOT** guarantee credit - it is only authorization for the return of the goods. Credit for return merchandise is at the sole discretion of Rottler. Credit will be issued only after inspection of returned goods.

Tools proven to be defective within the warranty period will be repaired or replaced at the factory's option.

We accept no responsibility for defects caused by external damage, wear, abuse, or misuse, nor do we accept any obligation to provide compensation for direct or indirect costs in connection with cases covered by the warranty.

Freight charges on warranty items (non-air shipment only) will be paid by Rottler Manufacturing for a period of 60 days only from the date of installation or set-up by a qualified service technician or sales representative.

Freight charges after the 60 day period are the customer's responsibility.

Safety Information:

⚠WARNING

MACHINE HAZARDS
Do not operate this equipment without prior training and instruction.
Failure to comply will cause serious injury.

Read and understand operator's manual before using this machine. Failure to follow operating instructions could result in personal injury or damage to equipment.

⚠WARNING WARNING indicates a potentially hazardous situation which, if not avoided, could result in death or serious injury.
This machine is capable of causing severe bodily injury.

This is the safety alert symbol. It is used to alert you to potential personal injury hazards. Obey all safety messages that follow this symbol to avoid possible injury or death.

⚠DANGER DANGER indicates an imminently hazardous situation which, if not avoided, will result in death or serious injury.

⚠CAUTION CAUTION indicates a potentially hazardous situation which, if not avoided, may result in minor or moderate injury.
CAUTION used without the safety alert symbol indicates a potentially hazardous situation which, if not avoided, may result in property damage.

Indicates machine splash cooling and the floor can be slippery when is wet.

Keeping your workplace safe is an important part of maintaining an effective workforce

Safety Instructions for Machine Use

KEEP GUARDS IN PLACE and in proper working order.

KEEP WORK AREA CLEAN. Cluttered areas and benches invite accidents.

KEEP CHILDREN AND VISITORS AWAY. All children and visitors should be kept a safe distance from work area.

WEAR THE PROPER APPAREL. DO NOT wear loose clothing, gloves, rings, bracelets, or other jewellery which may get caught in moving parts. Non-Slip foot wear is recommended. Wear protective hair covering to contain long hair.

ALWAYS USE SAFETY GLASSES. Also use face or dust mask if cutting operation is dusty. Everyday eye glasses only have impact resistant lenses, they are NOT safety glasses.

DO NOT OVER-REACH. Keep proper footing and balance at all times.

USE THE RECOMMENDED ACCESSORIES. Consult the manual for recommended accessories. The use of improper accessories may cause risk of injury.

CHECK DAMAGED PARTS. Before further use of the machine, a guard or other part that is damaged should be checked to determine that it will operate properly and perform its intended function. Check for alignment of moving parts, breakage of parts, mounting, and other conditions that may affect its operation. A guard or other part that is damaged should be properly repaired or replaced.

NEVER OPERATE A MACHINE WHEN TIRED, OR UNDER THE INFLUENCE OF DRUGS OR ALCOHOL. Full mental alertness is required at all times when running a machine.

NEVER ALLOW UNSUPERVISED OR UNTRAINED PERSONNEL TO OPERATE THE MACHINE. Make sure any instructions you give in regards to machine operation are approved, correct, safe, and clearly understood.

IF AT ANY TIME YOU ARE EXPERIENCING DIFFICULTIES performing the intended operation, stop using the machine! Then contact our service department or ask a qualified expert how the operation should be performed.

CAUTION

No list of safety guidelines can be complete. Every shop environment is different. Always consider safety first, as it applies to your individual working conditions. Use this and other machinery with caution and respect.
Failure to follow guidelines could result in serious personal injury, damage to equipment or poor work results.

Electrical Power:

⚠ DANGER

All electrical power should be removed from the machine before opening the rear electrical enclosure. It is recommended that the machine have a electrical LOCK-OUT device installed.
Make sure all electrical equipment has the proper electrical overload protection.
In the event of an electrical short, grounding reduces the risk of electric shock by providing a path of least resistance to disperse electric current.

⚠ WARNING

Electrocution or a fire can result if the machine is not grounded correctly. Make sure the ground is connected in accordance with this manual. DO NOT operate the machine if it is not grounded.
The operator and nearby personnel should be familiar with the location and operation of the Emergency Stop Button.

⚠ CAUTION

No single list of electrical guidelines can be comprehensive for all shop environments. Operating this machinery may require additional electrical upgrades specific to your shop environment.
It is your responsibility to make sure your electrical system comply with all local codes and ordinances.

⚠ DANGER

SHOCK HAZARD
Disconnect power before servicing.
Maintenance to be performed by trained personnel only.
Improper use will result in serious injury or death.

Electrical Equipment Authorized Personnel Only
Make sure all electrical equipment has the proper overload protection.

The **VR8** should have ***a fully isolated*** power supply to prevent damage and uncontrolled movement of the machine.
If the VR8 is on the same power lines that are running to other electrical equipment (grinders, welders, and other AC motors) electrical noise can be inducted into the VR8 electrical system.
Electrical noise can cause the controller to see false signals to move. Not supplying a fully isolated supply to the machine may void factory warranty. Refer to the Power supply section later in this chapter for voltage and amperage requirements of the VR8.

Machine Operator:

The operator of the VR8 should be a skilled machinist craftsman who is well versed in the caution, care, and knowledge required to safely operate metal cutting tools.

If the operator is not a skilled machinist he/she must pay strict attention to the Operating Instructions outlined in this manual, and get instruction from a qualified machinist in both production and operation of this machine.

The **VR8** machines have the following areas of exposed moving parts that you must train yourself to respect and stay away from when they are in motion:

⚠ CAUTION

Machining – Eye protection must be worn during all operations of the machine. Hands must be kept completely away from the grinding wheel area.

Work Loading and Unloading – Carefully develop handling methods of loading and unloading work pieces so that no injury can result if hoist equipment or lift connection should fail. Periodically check lift components for damage that may cause failure of Cylinder head Handler Assembly.

Machine Maintenance – Any machine adjustment, maintenance or parts replacement absolutely requires a complete power disconnection from the machine, ***this is an absolute rule.***

Machine Purpose

The **VR8** machine has been projected for the resurfacing by grinding wheel of engine valves..
The operating range is reported in the data sheet.
Use the machine only for the purpose for which it has been design. Any other use has to be considered as improper and irrational.
The manufacturer declines any responsibility for damages caused by improper or irrational use.

Description

Rottler Centerless Grinding Valve Refacing Machine with Digital Display Valve Face Angle Device from 10 to 50 degrees
Variable Spindle speed 0 - 2500 RPM and variable Valve Rotation Speed from 0 to 230 RPM
Technical data

Valve stem capacity	.200” - .600” / 5.0 *÷ 15 mm (*With optional chuck dia 3 – 5mm)
Valve head capacity	min 25 mm max 120 mm
Valve length capacity	min 74 mm max 210 mm
Diameter of grinding wheel	8” - 200 mm
Grinding wheel rotation	2750 rpm
Grinding wheel speed	30m/sec
Voltage (+/- 15%)	230 V
Phases	1
Min. protection degree	IP 44
Wheel head motor power	0.56 kW
Coolant pump motor power	0.1 kW
Valve drive motor	0.1 kW
Total power	0.9 kW
Environment conditions: Temperature humidity	10÷30 ℃ 15÷90 % RH
Weight: machine+ packing + standard equipment	540Lbs. / 235 kg
Packing dimensions	42.2" x 23.5" x 38.8"H (1070mm x 600mm x 910mmH)

Transport and handling information.

Packing

Packing Type:

Wooden crate on pallet.

Note: weight and dimensions as per technical data.

How to Remove the Packing.

Place the packed machine (as per point 1.02.1)on a floor duly supporting the weight of the machine, as well as the weight of the operator, the accessories, the workable items, lifts, etc.
Keep around a suitable area to allow an easy disassembling of the packing. Laterally the free space has to be wider than any other removable item. The roof has to be one meter higher at least..
Remove any metal tape tying the packing.

Chapter 2 Machine Installation:

Unpacking and Lifting:

Use care when removing the crate materials from the machine. Be careful not to use force on any part of the machine.

Remove the shipping screws (4) from the skid; the shipping brackets will be painted red and lifting bracket on yellow for easy identification. These screws are located at the four bottom corners of the Main Base.

The machine can be lifted by ropes once duly secured by.

CAUTION THIS MACHINE IS TOP-HEAVY. Use care when lifting and moving Machine.

DO NOT BEND THE MACHINE. HOIST IT IN ORDER ITS GRAVITY BE BALANCED TO AVOID ANY OVERTURN.

Eventual long distance transports have to be done only with packing in good condition. Should the machine arrive with broken packing, call our technicians to ascertain if any damage has been caused.
Fix the packing properly for any prosecution of the transport.

Whether for land, or sea or air transport, it is advisable to duly fasten the packing, to avoid any overturn.

General Warning

Machine Emergency Stop

In case of emergency, the machine can be totally stopped by pushing the emergency red button. The switchboard remains still connected to the line as well as the lamp. Turn the main switch off for a complete disconnection from the line.

Chapter 3 Control Definition

Chapter 4 Machine Installation

Floor Base

For a suitable working level, suggest to rise the machine up to some 650 mm..
Avoid an excessive smoothness of the floor to prevent any sliding of the operator.

Machine Bolting

Put it on a bench and duly bolt the machine to it through the holes located on the lower part of the machine base. Bolt the bench to the floor by using some studs drowned into the concrete By means of a spirit level; check in both ways the planarity of the machine.

Operating and Maintenance Space

The outline gives an indication of the suggested space for a convenient machine using and maintenance intervention. In respect of the roof height follow what requested by the local authority.

Power Supply:

General Warnings

The electrical connection to the power source has to be done by electricians only. Verify if the feed line is in accordance with the norms in force. In the negative, keep the due remedy. Make sure the wiring connection to the power source has been correctly done and not hinder the normal operation and maintenance of the machine.
The section of the feeding cable, as well as the protective covering have to be calculated accordingly with the fed power. Check the source voltage be as indicated in the machine data plate. Also check the cables are well insulated and the machine connected to the earth. On the feeding line there must be a cut-off circuit breaker.

⚠ CAUTION

Caution: Plug the machine to the power source paying attention to the data reported on the plate fitted to the machine. Make sure the feeding cable be in accordance with the safety rules.

Once connected the machine, pay attention its sense of rotation be correct. In the negative, invert one phase. Follow the marks and the cable color to identify the phases.

Important: Electrically connect in accordance with national and local electrical codes.

This machine has the following power requirements:
208 to 240 VAC it should not exceed 240 Volts
Single Phase
50 or 60 Hertz
30 amps

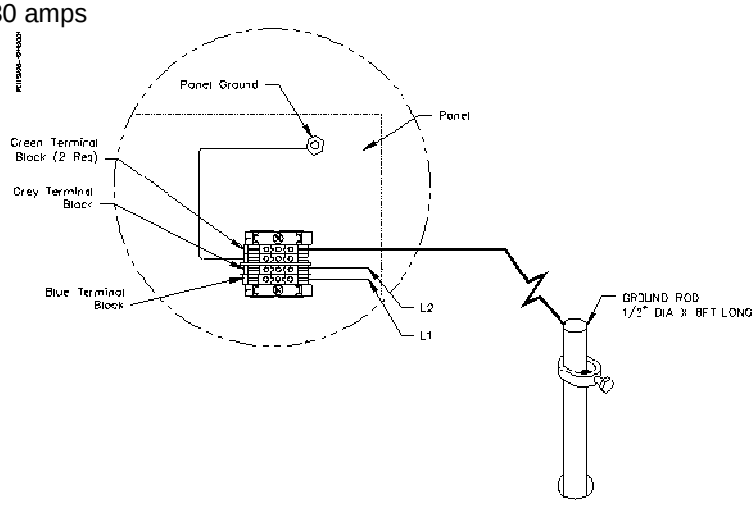

Air Supply:

It is very important the air source for the VR8 machine be moisture free.
Water and oil in the line will result in early cylinder and valve failure. The factory recommends installing a water trap at the machine.

Attach a 100 P.S.I. air source to the appropriate intake in the small enclosure located on the left rear of the machine near the bottom.

.

Safety Devices and Advises

General Warnings.

Pay attention all warning lights placed on the machine switchboard are duly working. Replace them if burned out.
Do not operate with the machine if not duly trained and authorized to use it. In absence of operator keep the machine and its switchboard duly locked.

Use of the Machine

The machine has to be used only by authorized personnel duly trained. Read carefully the instruction manual before operating
Do not drink alcohol or inhere sleepy substances or medicines before or during the operating of the machine. Use the recommended working-suit duly buttoned. Avoid necklaces tie, scars, etc.

From time to time check the good functioning of the machine especially in respect of the safety fixtures. Carefully fulfill what required on the instruction manual concerning the periodical maintenance.
For any improper functioning or breakdown call the after sale service.

Main Fixtures

The machine is composed by:
A rigid cast iron guard over the grinding wheel guard.

Chapter 5 Machine Operator:

Preliminary Operation

The operator of the **VR8** should be a skilled machinist craftsman who is well versed in the caution, care, and knowledge required to safely operate metal cutting tools.

Clean the machine carefully, removing the protective grease spread on unpainted parts.
Lubricate the points as indicated.
Before the delivery the machine has been duly tested therefore it is not necessary any particular setting up when using it.
Anyway, since damage might occur during the transport, it is advisable to verify its status before putting into operation.

WARNING

EYE HAZARD
FLYING OBJECTS
Wear eye protection while operating this equipment.
May cause serious injury.

Work Area:

Keep the floor around the machine clean and free of tools, tooling, stock scrap and other foreign material and oil, grease or coolant to minimize the danger of tripping or slipping. Rottler recommends the use of anti-skid floor strips on the floor area where the operator normally stands and that each machine's work area be marked off. Make certain the work area is well lighted and ventilated. Provide for adequate workspace around the machine.

Overreach:

Maintain a balanced stance and keep your body under control at all times.

Hand Safety:

NEVER wear gloves while operating this machine.

Machine Capacity:

Do not attempt to use the machine beyond its stated capacity or operations. This type use will reduce the productive life of the machine and could cause the breakage of parts, which could result in personal injury.

Avoid Accidental Starting:

Make certain the main switch is in the OFF position before connecting power to the machine.

Careless Acts:

Give the work you are doing your undivided attention. Looking around, carrying on a conversation and horseplay are careless acts that can result in serious injury.

Job Completion:

If the operation is complete, the machine should be emptied and the work area cleaned.

Replacement Parts:

Use only Rottler replacement parts and accessories; otherwise, warranty will be null and void.

Misuse:

Do not use the machine for other than its intended use. If used for other purposes, Rottler Manufacturing disclaims any real or implied warranty and holds itself harmless for any injury or loss that may result from such use.

Emergency Procedure:

Assuming one of the following has occurred: Work piece or spindle base not clamped, depth of cut not set correctly, these mistakes will become obvious the minute the cut starts

PRESS THE EMERGENCY STOP BUTTON (on the front control panel) IMMEDIATELY!

Grinding Wheel

Use ONLY the **ROTTLER** grinding wheels using the reference numbers listed on consumable section of this manual. Those grinding wheels are already balanced before delivery.

Attention! The use of original parts is required.

Before mounting a wheel, always check that it is not damaged does not show any shock or damage mark, and that it « rings » clear.

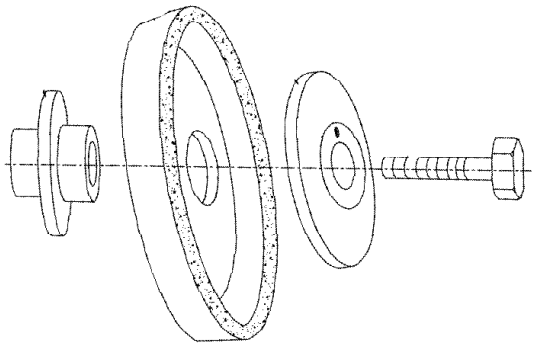

NEVER MAKE THE WHEEL ROTATE WITHOUT ITS PROTECTING COVER.

1. Be sure that the machine is not powered.
2. Remove the protecting cover of the wheel.
3. Push the spindle looking pin located on the back of the spindle housing.
4. Insert the proper wrench supplied with standard equipment in the middle of the hub to lock the wheel.
5. Lock the hub on the wheel and release the spindle looking pin.
6. Reassemble the protecting cover of the wheel.

Dressing the Grinding Wheel

1. Move the valve carrier to the park position or the lower position.

2. Mount the Diamond dresser device on the right part of the machine like you see on picture (1) and loose the looking handle and bring the diamond down (make sure the diamond is not going to make contact with the grinding wheel) and lock.

3. Start the coolant pump by turning the switch button to the on position. (cooling must be on after the wheel is rotating to avoid unbalancing the wheel)

4. Feed the diamond until it start making Contact to the wheel and dresser and feed the diamond point turns the scaled knob

5. Set the proper speed for dressing (Truing)

6. Bring the main lever up and down with a slow and continuous motion several times, from one end to the other so that the grinding wheel is completely dressed or until the face on the grinding wheel is complete clean.

7. Place the diamond feed lever to the up position, removed and storage the Diamond dresser device in a safe place.

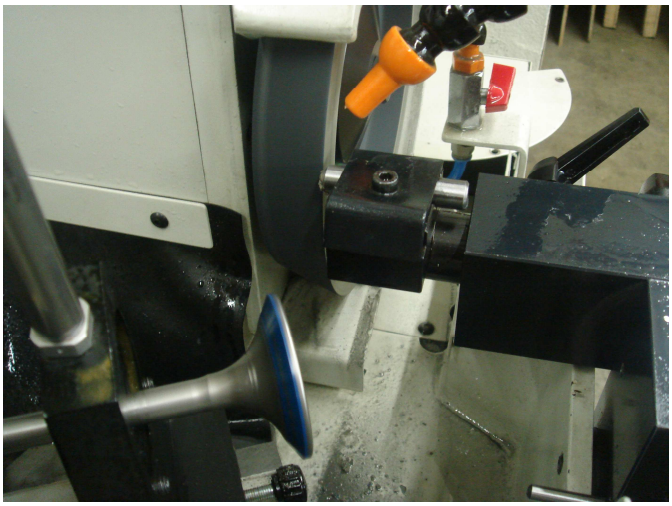

Chapter 6 Operating Guide

The ROTTLER VR8 MODEL is a machine fitted with high speed rotating grinding wheels, it is therefore very important to apply the following safety instructions.

Do not use the machine without all the guards on.

Grounding procedure: the machine comes with a three wire conductor. The green / yellow wire must be connected to the ground in the plug and receptacle. A qualified electrician is required for this procedure.

Personal protection: prior to operating the machine, Remove loose clothes and. Safety shoes must be worn.

Do not wear gloves. 

Eye protection: wear safety glasses, goggles, or a facial shield.

Stop the machine before making adjustments or removing chips from the working area.

The part to be machined must be strongly clamped before beginning machining.

The power must always be off if the operator is not present.

Chapter 7 Calibrating the Digital Angle Display:

- Set the rocker arm so that the scale is at zero by losing the swing angle position block and then clamped. Referred to (Fig. 1)
- Fit the calibrating device (Fig. 2) into the chuck the same as if a valve is to be ground.
- Set up a magnetic dial gage and magnetized on t he grinding wheel cover and the dial on the center left of the machining face of the calibrating device (Fig. 3) and set the dial gage on Zero.
- Stroke the rocker arm back and forward the machining face of the calibrating device and adjust the angle until both sides of the calibrating device read zero on the dial gage.
- Press the Reset button (RST) so that the display shows 0.0
- Remove the calibrating device, The Digital Angle Display has been calibrated to the perfect zero setting.

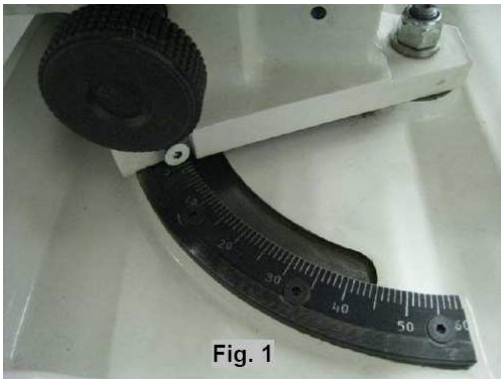
Fig. 1

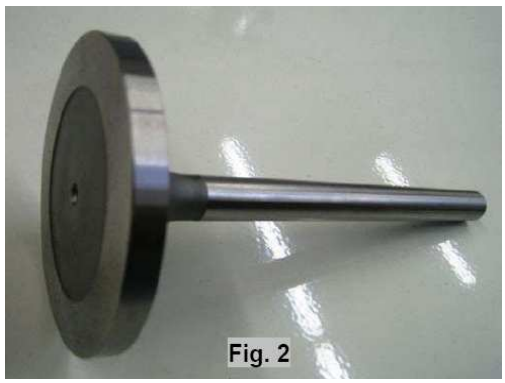
Fig. 2

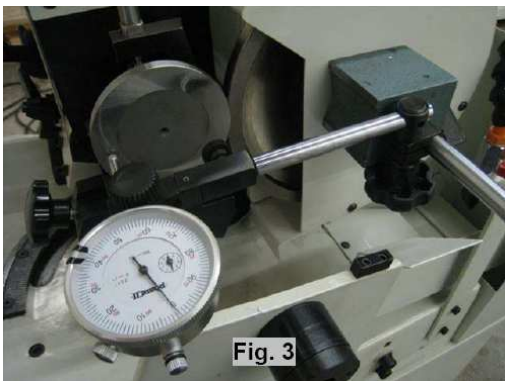
Fig. 3

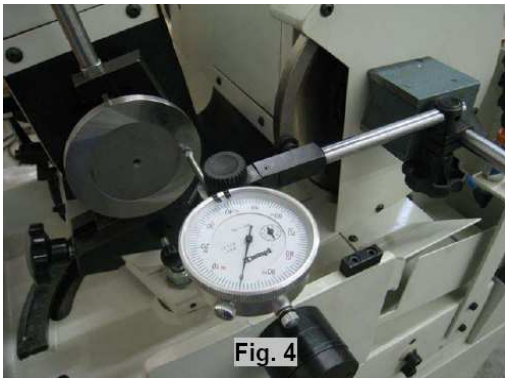
Fig. 4

Fig. 5

Chapter 8 Resurfacing Procedure

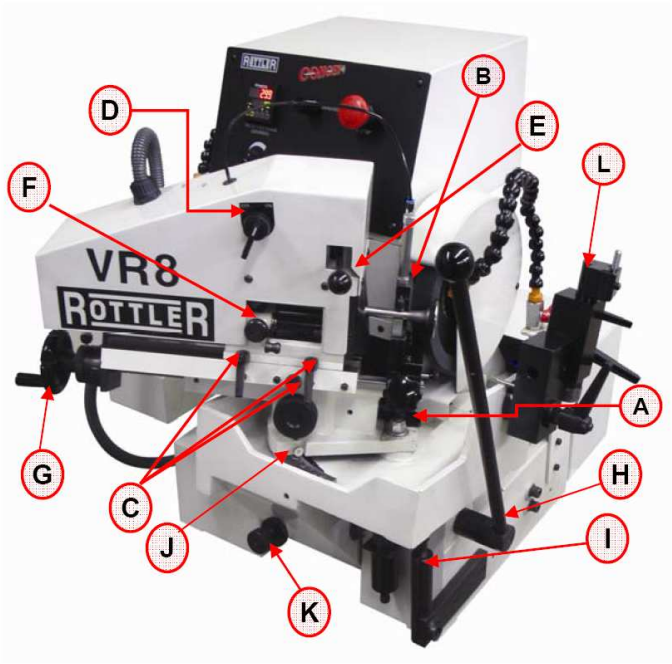

A - Swing angle support handle

B - Valve stem steady rest

C - Slide support looking handles (2 sliding bases)

D - Pneumatic Steady Rest release Switch.

E - Valve Stem drive out Handle.

F - Valve Stem Stop

G - Valve grinding Feed Knob

H - Stroking Lever Handle

I - Grinding stopper adjusting nut

J - Angle pointer

K - Grinding wheel carrier stroking stop

L – Grinding wheel dresser

⚠ WARNING

EYE HAZARD
FLYING OBJECTS
Wear eye protection while operating this equipment.
May cause serious injury.

Note:
To achieve a good run out on the valve head is imported to keep valve stem clean and the butt must be resurface.

1. Grinding angle setting
2. Check the valve seat angle that you will be grinding.
    a. Loosen the handle or locking nut **A** and rotate the slide support valve holding group look at the angle pointer **J** and set it to the angle from the valve. Verify the angle on the Digital display unit and set it to the proper angle.
    b. Lock the handle **A**

3. Valve positioning
    a. Shift the valve rest **B** on the slide, in order the supporting of the valve stem is done at its end as much as possible.
    b. By means of the hand wheel **G** shift the valve driving unit in a convenient position.
    c. By means of the lever **H**, pull the machine arm to the operator to release the upper valve driving roller.
    d. Rise up the valve pressing finger **F** located on the rest.
    e. Insert the valve into its lodgment up to touch the swinging stop device **F**. Eventually adjust the stop device in length **C**.
    f. Lower the stem pressing finger of the rest.
    g. Approach the valve using the stroking lever handle **H** to the grinding wheel

4. Adjusting
    a. Switch on the grinding wheel motor as that one of the valve driving and of the coolant pump.
    b. If necessary adjust position of the valve by shifting the driving unit. Once reached the right position, block the slide by screwing the knob **K;** This adjustment limits the Grinding wheel carrier stroke in sweeping so that the wheel would not damage the valve stem.
5. By the lever, approach the valve to the grinding wheel within touching it. Rise up the swinging stop **F**. The valve automatically moves to left thus starting its grinding against the wheel.
6. Swing the machine stroking lever handle **H** in order to grind the valve on all the profile of the grinding wheel.
7. For any further pass turn the hand wheel of the valve driving unit.
8. Once performed the grinding operation, push to left **E** the upper roller lever. The valve is automatically pushed to right, for away from the grinding wheel.

9. Valve grinding by sequence
    a. Pull the machine stocking lever handle **H** towards the operator to rise the upper roller thus releasing the valve.
    b. Rise up the rest pressing finger
    c. Take out the ground valve.
    d. Insert the second valve up to touch the swinging stop device **F**.
    e. Let the rest finger go down.
    f. Push the machine stocking lever handle **H** to approach the valve to the grinding wheel. Rise the swinging stop device in **F** to let the valve go towards the grinding wheel.
    g. Once performed the grinding operation, push to the left, the upper roller lever to release the valve to right. Pull the arm towards the operator.

Note:
Once performed the resurfacing. Do not let the coolant overflowing from the splash guard to prevent any sliding risk of the operator, also not to pollute the environments.
Recover the residuals into the settling tank and dissipate them accordingly with the law.

⚠ CAUTION Never rotate the machine stroking lever handle **H** when the grinding wheel is in contact with the valve, move the stroking lever slowly into the grinding wheel to avoid hard contact with the grinding wheel.
This handling would possible destroy the grinding wheel and after the surface finish of the valve head.

Grinding of Valve Stem Ends

⚠ WARNING

EYE HAZARD
FLYING OBJECTS
Wear eye protection while operating this equipment.
May cause serious injury.

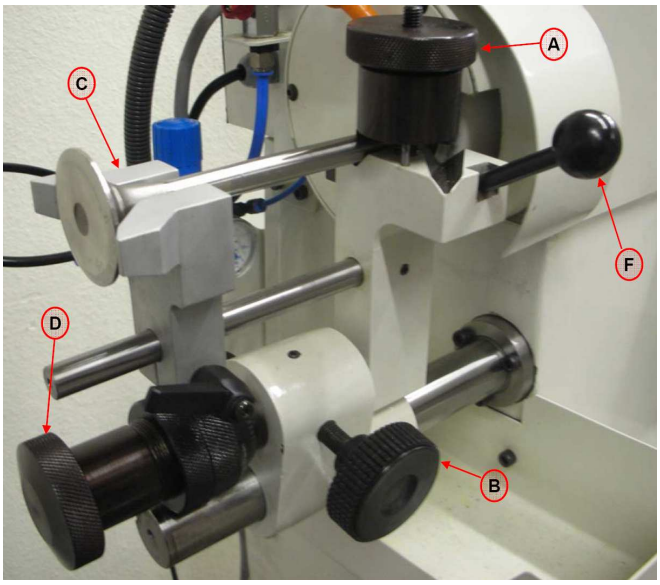

1- Install the valve stem on the clamping block axis, on the right side of the machine, with the straight "V" near the wheel. To do that, you have to lock the index in position **B**, and rotate the clamping block by using the lever handle **F**.

2- Use the "V" perpendicular to the wheel to clamp the valve on the clamping block **C**. Use the rear screw (to rotate the clamping block) to put in contact the valve stem end and the grinding wheel.

3- Lock the valve in this position **A**.

4- Unlock the graduate ring of the micrometer screw, and put it to zero **D**.

5- Use the clamping block rotation to avoid a contact between the valve and the wheel (unlock the V stopper **C** to do that).

6- Adjust the micrometer screw with your grinding value. Be careful, you shouldn't grind more than .0005”.

7- Start the wheel and the coolant system.

8- Use the clamping block **F** rotation to grind the valve stem end (backward and forward movement).

9- At the end of the machining, don't forget to stop the wheel and the coolant system.

10- Wait the end of the grinding wheel rotating to remove the valve from the clamping block.

Valve Stem Chamfering

⚠ WARNING

EYE HAZARD
FLYING OBJECTS
Wear eye protection while operating this equipment.
May cause serious injury.

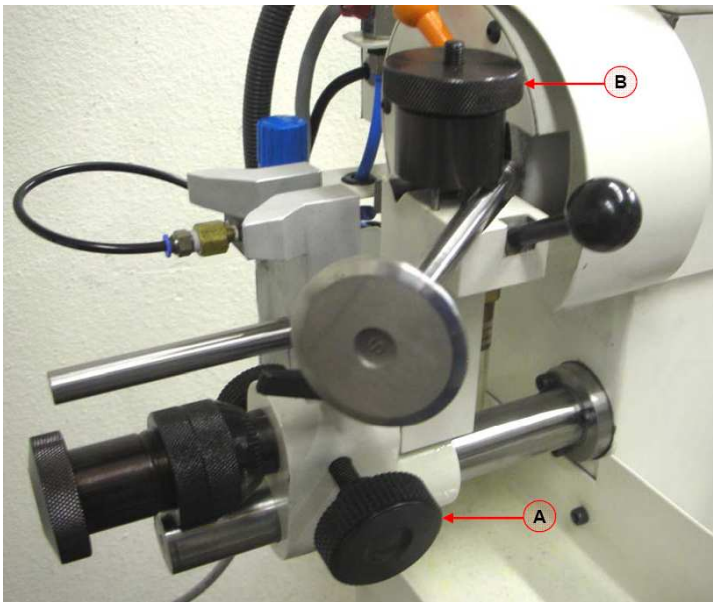

1. Put the end stop knob **A** on the valve and block it in position (not too tight).

2. Use the "V" 45° to the wheel to clamp the valve onto the clamping block. Use the top knob **B** (to rotate the clamping block) to put in contact the valve stem chamfering and the grinding wheel.

3. Block the valve in this position on the clamping system. Don't tight too much; you should be able to turn the valve around his own axis.

4. Start the wheel and the coolant system.

5. Use the clamping block rotation to grind the valve stem chamfering (turn the valve around his own axis).

6. At the end of the machining, don't forget to stop the wheel and the coolant system.

7. Wait the end of the grinding wheel rotating to remove the valve from the clamping block.

Chapter 9 Troubleshooting

Out of Service

Temporary Out of Service

Electrical Supply

DANGER

SHOCK HAZARD
Disconnect power before servicing.
Maintenance to be performed by trained personnel only.
Improper use will result in serious injury or death.

Disconnect the machine from the source.
It is advisable to keep the hearth cable connected to dissipate any static electricity.

Mechanical Part Protection

Lubricate all mechanical parts as indicated at the point lubrication.
Protect the parts from dust as well as from oxidation.

Center Lining Fittings Care

Particular care has to be given to the centering fittings to avoid their rusting, abrasion or dirtiness, thus compromising their perfect center lining. Replace them if necessary, as well as any cutting tool if not working properly.

Chapter 10 Machine Parts

Sketch No. 1 Base Assembly (Parts)

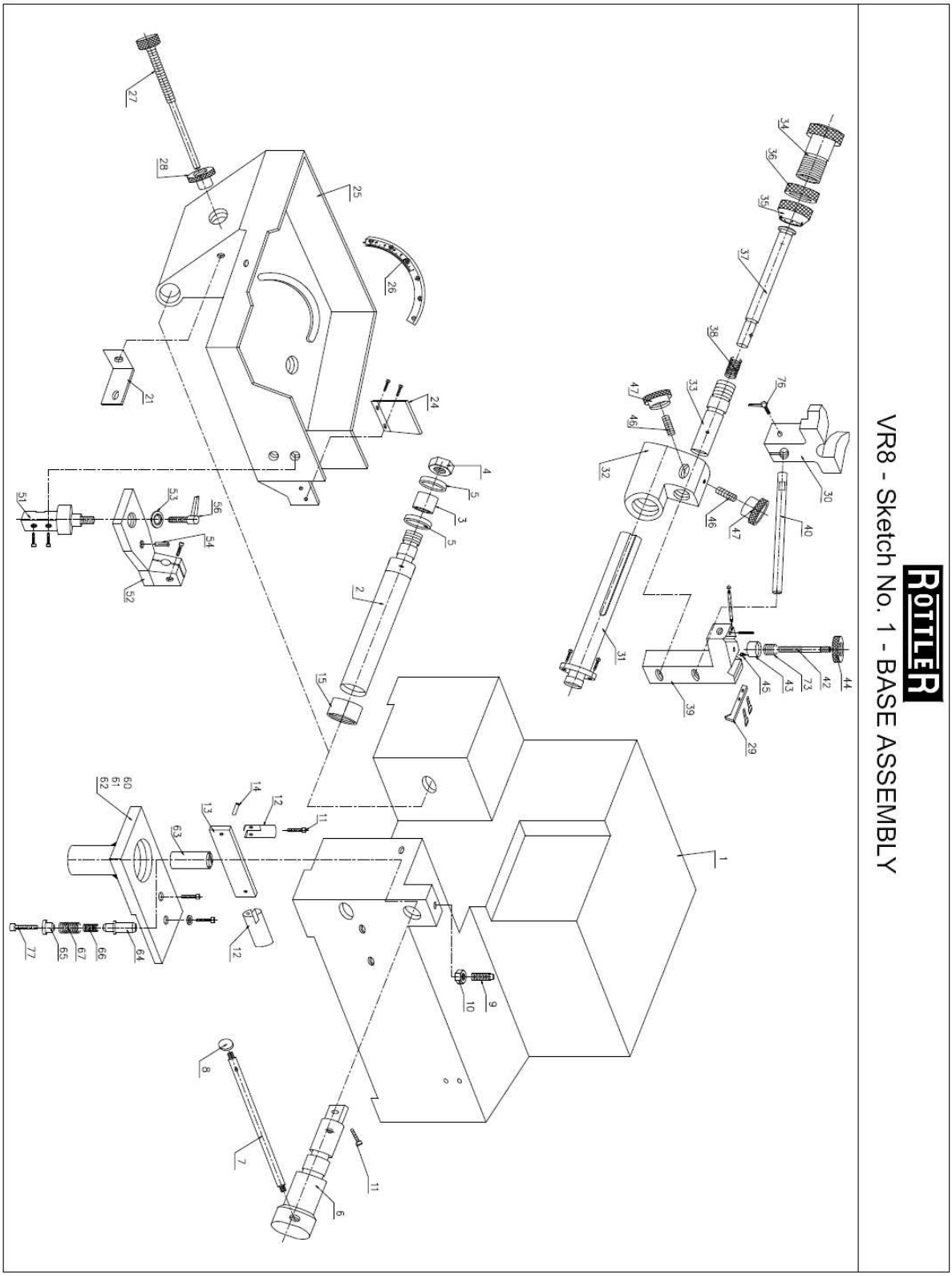

Sketch No. 1 Base Assembly (Description)

S. NO.	PART NO.	DESCRIPTION	QTY	REMARKS
1	555-101	BASE	1	
2	555-102	PIVOT PIN	1	
3	555-103	LINER (BRONZE)	1	
4	404	NUT	1	777
5		THRUST BEARING	2	
6	555-106	SWING PIN	1	
7	555-107	HAND LEVER	1	
8		BALL KNOB	1	
9	555-109	DOG POINT SCREW	1	
10		NUT	1	
11		SCREW	2	
12	555-112	HING PIN	2	
13	555-113	SWING ARM	1	
14	555-114	PIVOT PIN 1/4	2	
15	555-115	BUSH	1	
16				
17				
18				
19				
20	-----	----	--	
21	555-121	ROCKER CLAMP	1	
22				
23				
24	555-124	COOLANT GUARD FIXTURE	1	
25	555-125	ROCKER	1	
26	555-126	CLAMP RING	1	
27	555-127	STOP BOLT	1	
28	555-128	STOP KNOB	1	
29	555-129	STOPPER PLATE	1	
30	555-130	V-NEST STOP	1	
31	555-131	SUPPORT ROD	1	
32	555-132	SUPPORT BLOCK	1	
33	555-133	GUIDE BUSH	1	
34	555-134	FEED KNOB	1	
35	555-135	SETTING WHEEL	1	
36	555-136	LOCK NUT	1	
37	555-137	PIVOT PIN	1	
38	555-138	SPRING	1	
39	555-139	SWING ARM	1	
40	555-140	SUPPORT ROD	1	
41	-----	-----	----	
42	555-142	STUD	1	
43	555-143	CLAMP RING	1	
44	555-144	KNOB	1	
45	555-145	CLAMP PAD	2	
46	555-146	SCREW SPACIAL	2	
47	555-147	KNOB	2	
48	------	------	----	
49				
50				
51	555-151A	SUPPORT PIN	1	
52	555-152A	SWING BLOCK	1	
53	555-153	WASHER	1	

Sketch No. 1 Base Assembly (Description)

S. NO.	PART NO.	DESCRIPTION	QTY	REMARKS
54		PIN	1	
55				
56	555-156	HAND LEVER	1	
57				
58				
59				
60	555-160	BRACKET WELDED		
61	555-161	BRACKET	1	
62	555-162	HOLDER	1	
63	555-163	CYLINDER	1	
64	555-164	PIN LARGE	1	
65	555-165	PIN SMALL	1	
66	555-166	SPRING	1	
67	555-167	SPRING	1	
68	-----			
69	-----			
70	-----			
71	-----			
72	-----			
73	-----			
74	-----			
75	-----			
76		HAND LEVER	1	
77		ALLEN BOLT	1	
78				
79				
80				

Sketch No. 2 Grinding Wheel Assembly (Parts)

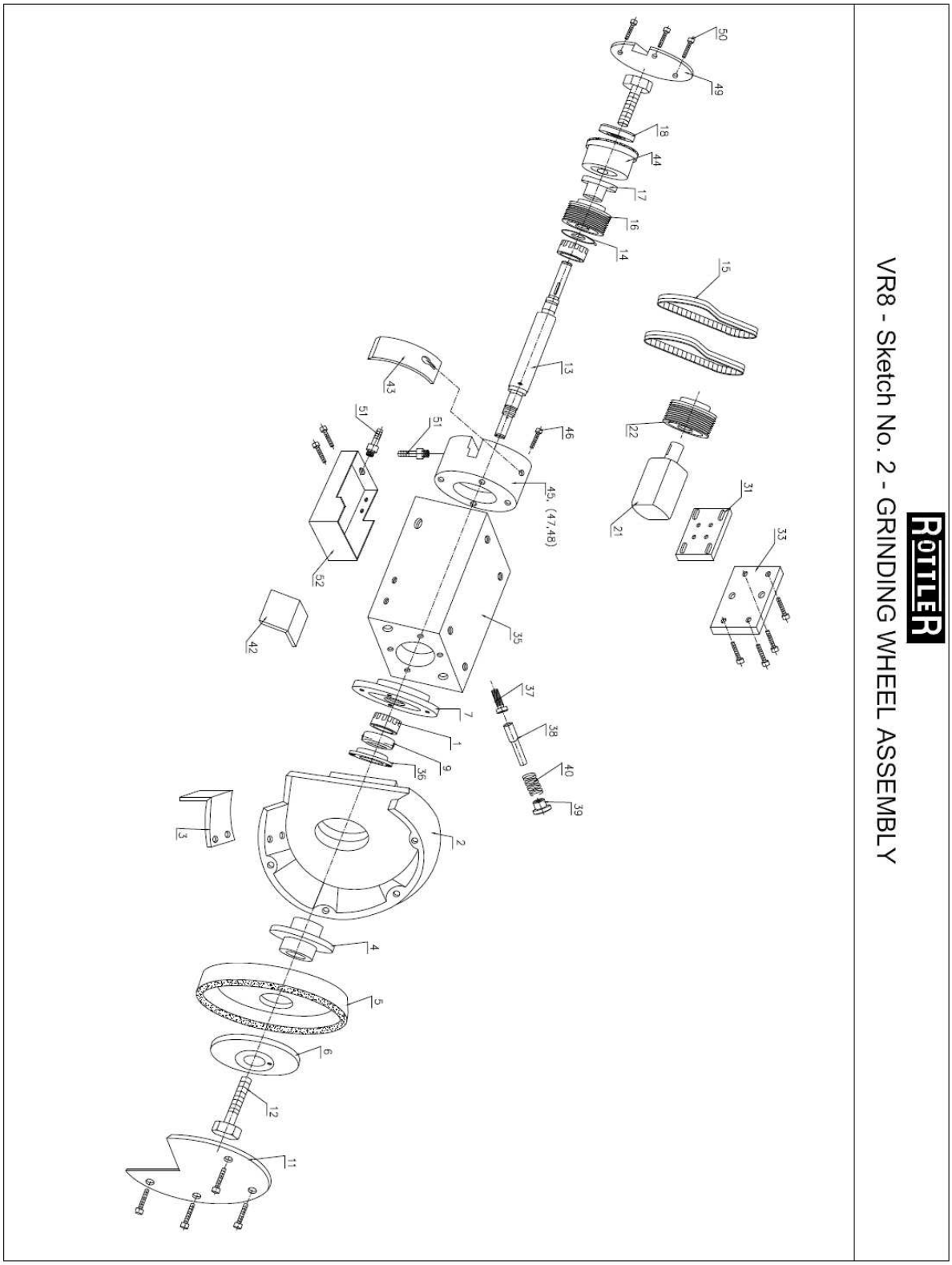

Sketch No. 2 Grinding Wheel Assembly (Description)

S. NO.	PART NO.	DESCRIPTION	QTY	REMARKS
1		ANGULAR CONTACT BEARING	2	
2	555-202	WHEEL GUARD	1	
3	555-203	SPLASH GUARD	1	
4	555-204	BEARING FLANGE	1	
5	555-205	GRINDING WHEEL	1	
6	555-206	FLANGE	1	
7	555-207	CLAMPING RING	1	
8				
9	555-209	NUT	1	
10				
11	555-211	COVER	1	
12	555-212	HEX BOLT	1	
13	555-213	SPINDLE SHAFT	1	
14		EXTERNAL CIRCLIP	1	
15		POLY RIB BELT	2	
16	555-216	SPINDLE PULLEY	1	
17	555-217	FLANGE INNER	1	
18	555-218	FLANGE OUTER	1	
19				
20				
21		MOTOR	1	
22	555-222	MOTOR PULLEY	1	
23				
24				
25				
26				
27				
28				
29				
30				
31	555-231	MOTOR MTG. PLATE	1	
32				
33	555-233	MOTOR COVER	1	
34				
35	555-235	SPINDLE HOUSING	1	
36	555-236	RETAINER RING	1	
37	555-237	STOP BOLT	1	
38	555-238	STOP PIN	1	
39	555-239	PUSH BUTTON	1	
40	555-240	SPRING	1	
41				
42	555-242	COOLANT GUARD	1	
43	555-243	COOLANT COVER	1	
44	555-244	GRINDING WHEEL (SMALL)	1	
45	555-245	COOLANT BOX WELDED	1	
46		ALLEN HEAD SCREW	4	
47	555-247	COOLANT HOUSING PLATE	1	
48	555-248	COVER RING	1	
49	555-249	COVER	1	
50		SLOTTED CAP SCREW	3	
51	555-251	NIPPLE	1	
52	555-252	COOLANT TANK	1	
53				

Sketch No. 3 Slide Support Assembly (Parts)

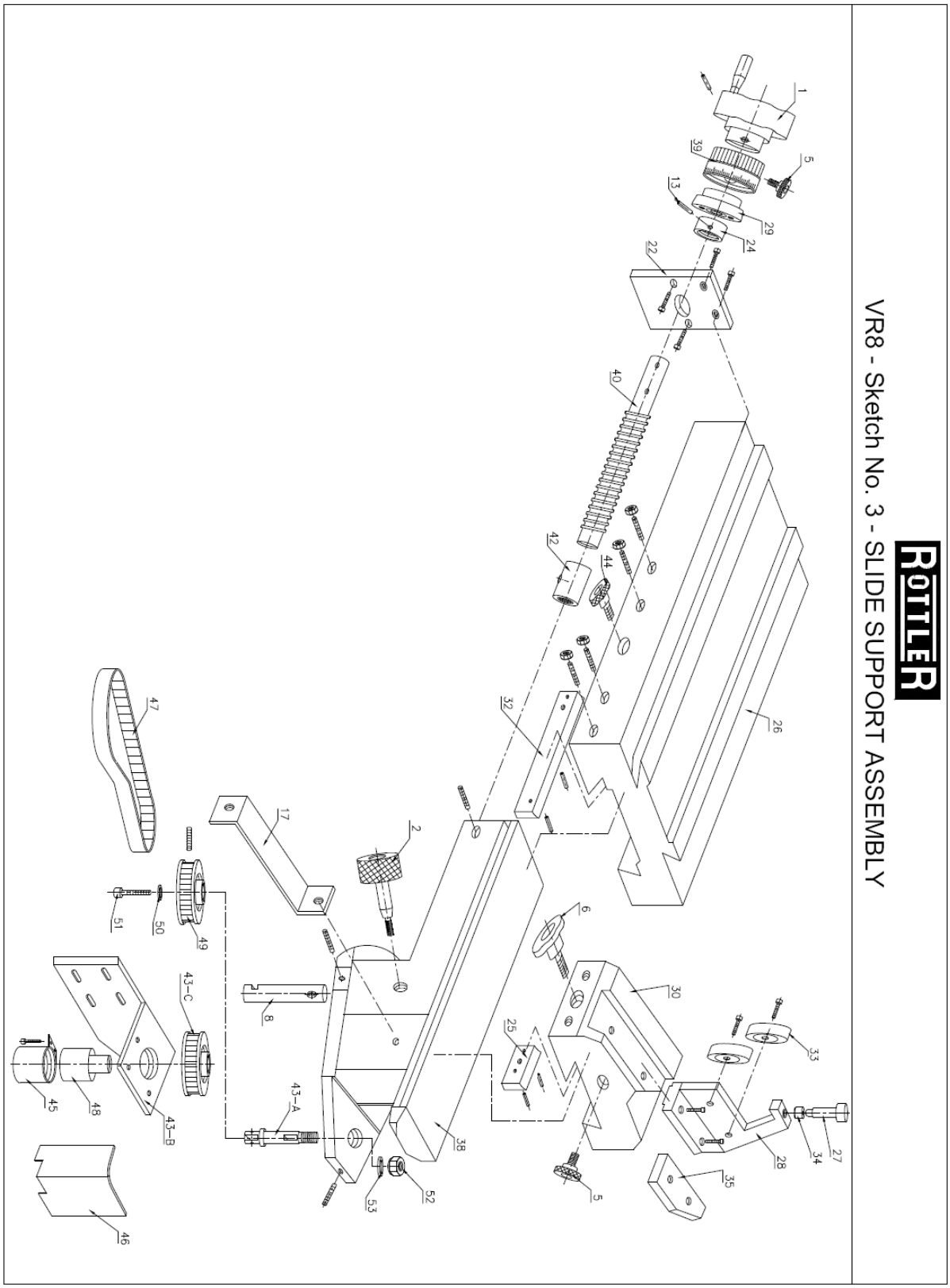

Sketch No. 3 Slide Support Assembly (Description)

S. NO.	PART NO.	DESCRIPTION	QTY	REMARKS
1	555-301	HAND WHEEL		
2	555-302	CLAMP KNOB ASSY.	1	
3	555-302-1	KNOB		
4	555-302-2	CLAMP ROD	1	
5	555-303	SETTING KNOB FLAT POINT	2	
6	555-304	KNOB (STEADY)		
7				
8	555-306	CLAMP ROD		
9				
10				
11				
12				
13		ROLL PIN	1	
14				
15				
16				
17	555-317	DOVETAIL CLAMP	1	
18				
18A				
19				
20				
21		SCREW		
22	555-322	SUPPORT PLATE	1	
23				
24	555-324	BEARING	1	
25	555-325	GIBB (STEADY)	1	
26	555-326	SLIDE	1	
27		AIR CYLINDER FESTO	1	
28	555-328	SUPPORT PLATE (STEADY REST)	1	
29	555-329	BEARING HOUSING	1	
30	555-330	BASE (STEADY)	1	
31				
32	555-332	GIBB	1	
33	555-333	ROLLER (STEADY REST)	2	
34	555-334	PAD	1	
35	555-328-A1	SPACING PLATE	1	
36				
37				
38	555-338	DOVE TAIL SLIDE	1	
39	555-339	FEED KNOBE	1	
40	555-340	LEAD SCREW	1	
41				
42	555-342	NUT	1	
43-A	555-343 A	PIVOT PIN	1	
43-B	555-343 B	SUPPORT BRACKET	1	
43-C	555-343 C	PULLEY	1	
44	555-344	SLIDE LOCKING KNOB	1	
45	555-345	COVER ENCODER	1	
46	555-346	GUARD	1	
47	555-347	BELT	1	
48	555-348	ENCODER	1	
49		PULLEY	1	SAME-555-421
50		WASHER	1	

51		BOLT	1	
52		NYLOCK NUT	1	
53		WASHER	1	

Sketch No. 4 Power Head Assembly (Parts)

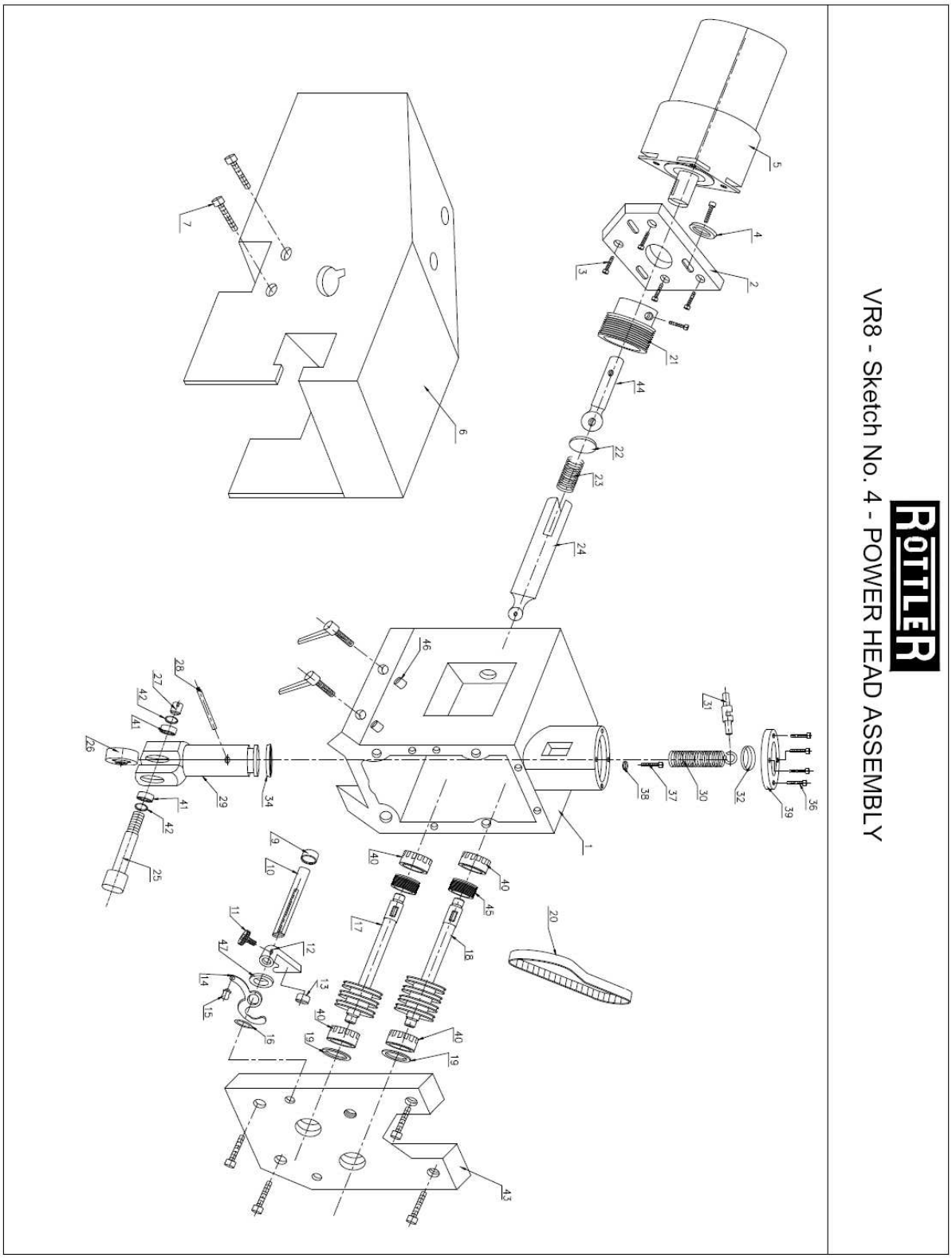

Sketch No. 4 Power Head Assembly (Description)

S. NO.	PART NO.	DESCRIPTION	QTY	REMARKS
1	555-401	POWER HEAD	1	
2	555-402	MOTOR PLATE	1	
3		SCREW		
4		WASHER		
5	555-405	MOTOR (DC) 1/17 HP		
6	555-406	MOTOR COVER	1	
7		SCREW	4	
8				
9	555-409	SPACER	1	
10	555-410	STEM SHAFT	1	
11	555-411	THUMB SCREW	1	
12	555-412	STEM STOP	1	
13	555-413	CARBIDE PAD	1	
14	555-414	FLIPPER	1	
15	555-415	KNOB	1	
16	555-416	CIRCLIP	1	
17	555-417	ROLLER (L.H.)	1	
18	555-418	ROLLER (R.H.)	1	
19		DISC WASHER	2	
20		BELT XL - 80	1	
21	555-421	MOTOR PULLEY	1	
22	555-422	PAD	1	
23		SPRING	1	
24	555-424	DRIVE SHAFT	1	
25	555-425	TOP ROLLER SHAFT	1	
26	555-426	TOP ROLLER	1	
27	555-427	DRIVE NUT	1	
28	555-428	PISTON HANDLE	1	
29	555-429	PISTON	1	
30	555-430	SPRING	1	
31	555-431	TENSION SPRING PIN	1	
32		O-RING 3/32 X 1-1/2 X 1-11/16	1	
33				
34	555-434	U-CUP SEAL	1	
35		STUD LOCK	1	
36		AL. SCREW	4	
37		AL. SCREW	1	
38		SPRING WASHER	1	
39	555-439	CYLINDER CAP	1	
40	555-440	BEARING	4	
41	555-441	BALL BEARING	2	
42	555-442	INTERNAL CIRCLIP	2	
43	555-443	FACE PLATE	1	
44	555-444	DRIVE ADAPTOR	1	
45	555-445	DRIVEN PULLEY	2	
46	555-446	PLUG	2	
47	555-447	SPACER	1	
48				

Sketch No. 5 Control Panel Assembly (Parts)

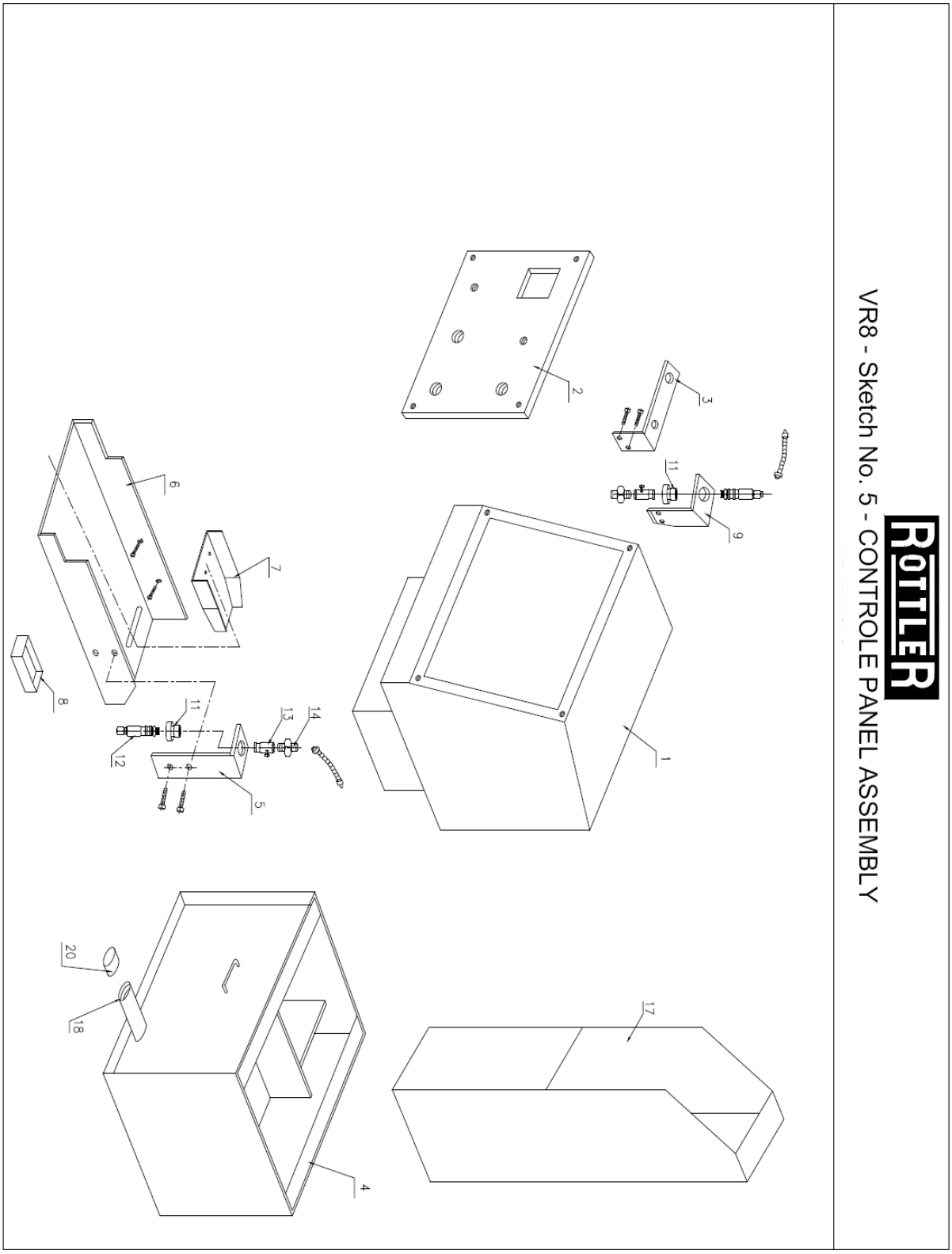

Sketch No. 5 Control Panel Assembly (Description)

S. NO.	PART NO.	DESCRIPTION	QTY	REMARKS
1	555-501	PANEL BOX	1	
2	555-502	PANEL PLATE	1	
3	555-503	FILTER MOUNTING BRACKET	1	
4	555-504	COOLANT TANK	1	
5	555-505	COOLANT BRACKET	1	
6	555-506	FLOW CHANNEL	1	
7	555-507	CHANNEL	1	
8	555-508	CHIP TRAY	1	
9	555-509	BRACKET	1	
10	555-510	PNEUMATIC CIRCUIT DIAGRAM	1	
11	555-511	REDUCER	2	
12		CONNECTOR	2	
13		CHECK VALVE	2	
14		NOZZLE	2	
15	555-515-I	POWER CIRCUIT DIAGRAM		
16	555-515-II	CONTROL CIRCUIT DIAGRAM		
17	555-517	COOLANT HOPPER	1	
18	555-518	NIPPLE	1	
19	555-519	COOLANT GRATE	1	NOT SHOWN
20	555-520	PLUG	1	

Sketch No. 6 Rocker Feed Assembly (Parts)

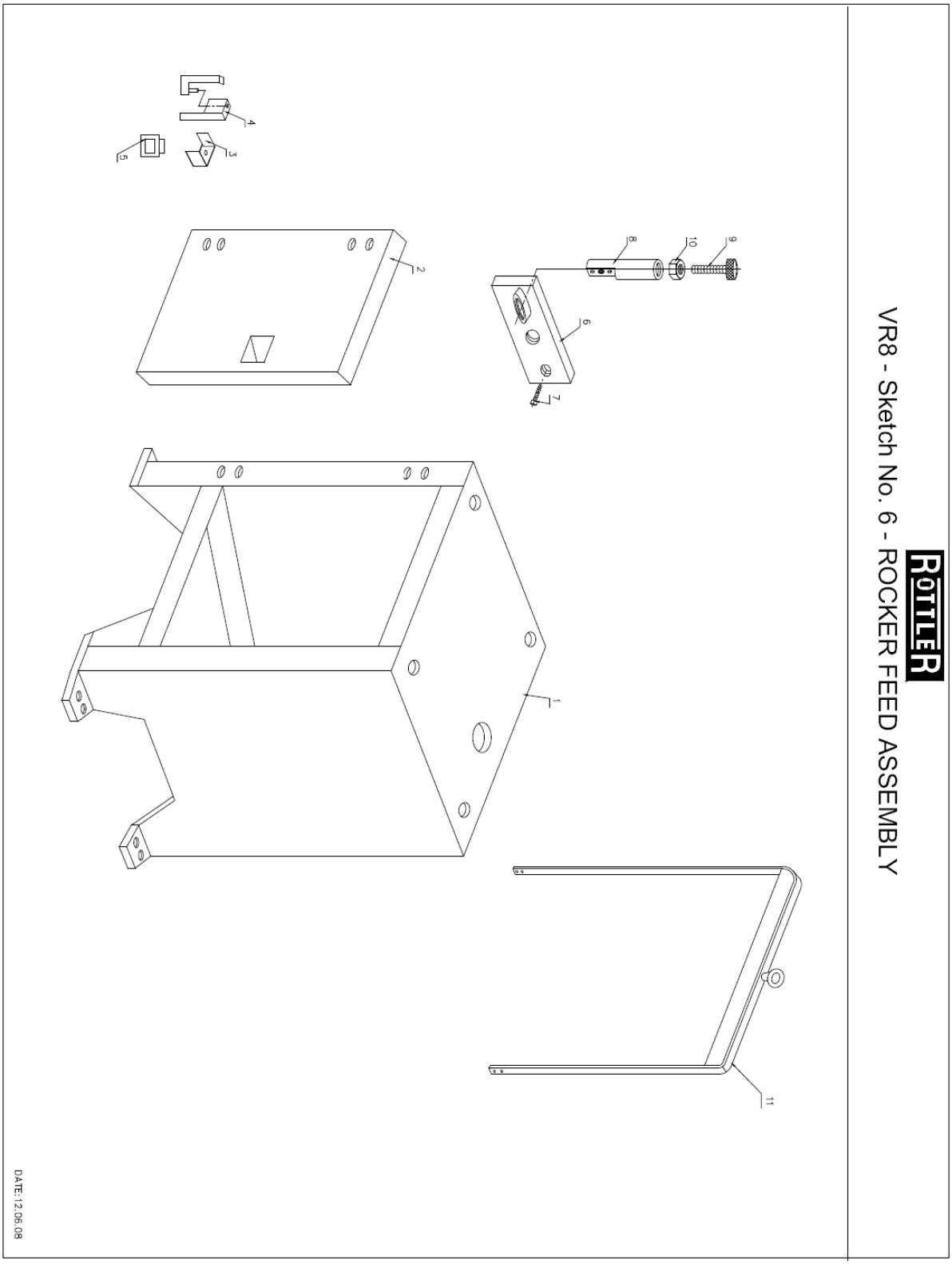

Sketch No. 6 Rocker Feed Assembly (Description)

S. NO.	PART NO.	DESCRIPTION	QTY	REMARKS
1	555-620	STAND ASSEMBLY	1	
2	555-631	DOOR	1	
3	555-632	CLAMP	1	
4	555-634	HING	2	
5	555-635	LOCK	1	
6	555-613	SUPPORT BRACKET	1	
7		AL-HEAD SCREW	2	
8	555-628	STROKE SETTING KNOB	1	
9	555-629	BOLT	1	
10	555-630	NUT	1	
11	555-618	LIFTING FIXTURE	1	
12	555-619	ANGLE SETTING STD.	1	NOT SHOWN

Chapter 11 Pneumatic Circuit Diagram

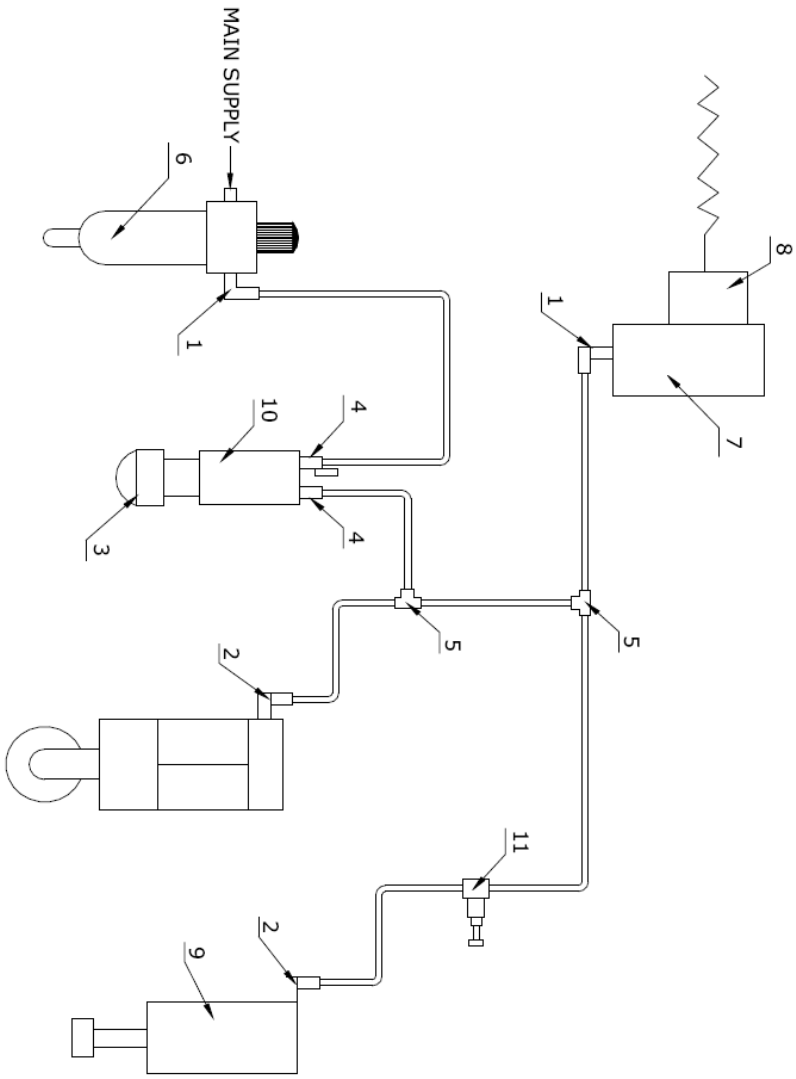

ROTTLER

VR8 - PNEUMATIC CIRCUIT DIAGRAM

S.NO.	DESCRIPTION	QTY
1.	PUSH IN /THREADED - L FITTING	2
2.	PUSH IN /THREADED - L FITTING	2
3.	SELECTOR ACTUATER	1
4.	PUSH IN THREADED FITTING	2
5.	PUSH - IN -T-CONNECTOR	2
6.	FILTER REGULATOR	1
7.	PRESSURE SWITCH	1
8.	PLUG SOCKET	1
9.	AIR CYLINDER	1
10.	BASIC VALVE	1
11.	PRESSURE REGULATOR	1

Chapter 12 Control Circuit Diagram

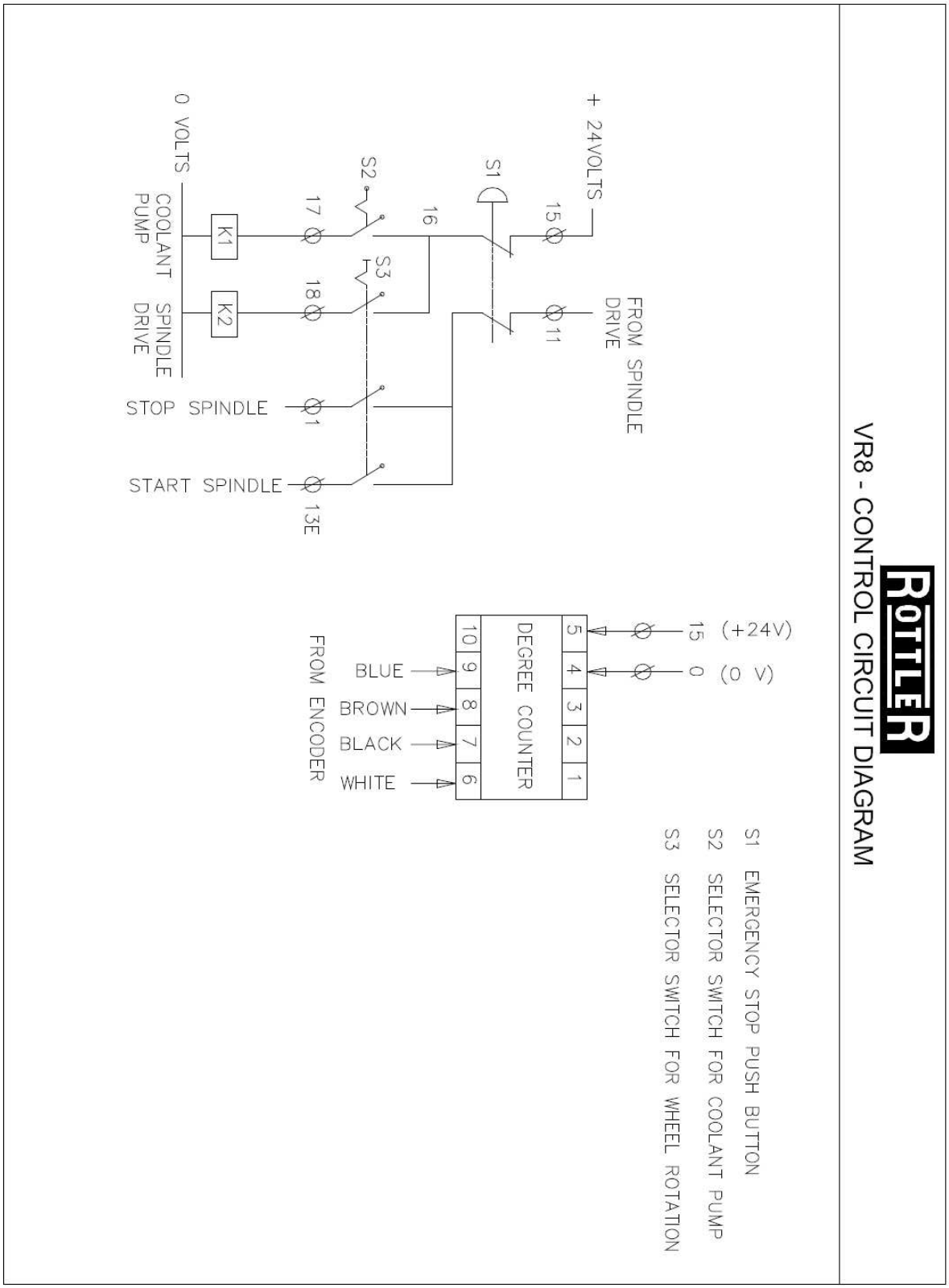

Chapter 13 Power Circuit Diagram

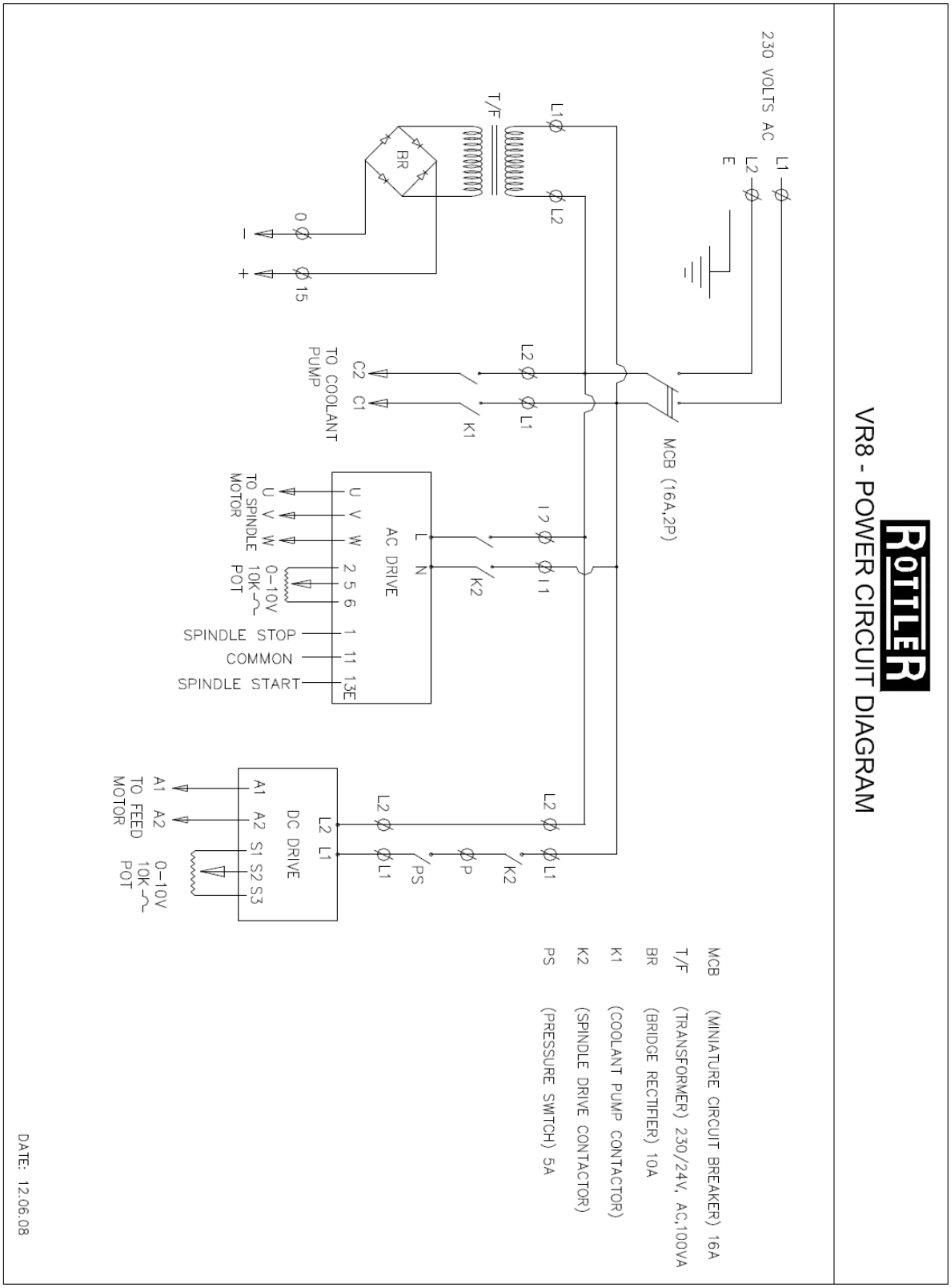

Chapter 14 Consumable Parts for VR8 Machine Model

Part Number	Description
VTRW-1	Main Grinding Wheel 8.0" (200mm) Diameter Special Applications, Titanium
VTRW-2	Main Grinding Wheel 8.0" (200mm) Diameter General Purpose
VTRW-3	Butt Grinding Wheel, General Purpose
VTRW-5	Single Point Wheel Dressing Diamond
7609A	Grinding Oil
	CBN Grinding Wheels:
CBNWHEEL	Main Grinding Wheel CBN
CBN20DEG	Special wheel to grind top face 20 degrees and OD of valves (special applications)
CBNBUTT	Butt Grinding Wheel CBN
7609	Synthetic Grinding Coolant - Water Soluble for CBN wheels. Mix 2% - 3% coolant with 97% - 98% water. 1 Liter
514-4-71D	Coolant Refractor (for measuring coolant/water ratio).

Chapter 15 Material Safety Data for Oil Grinding

Rottler Reference No. 7609A / Goodson No. VGO-10 / VGO-50

Complies with OSHA's Hazard Communication - Standard 29 CFR 1910.1200.

DATE OF PREPARATION: January 1, 2008 (Reviewed Jan 2008)

1. CHEMICAL PRODUCT IDENTIFICATION

Part No. and Description: ROTTLER Reference No. 7609A Valve Grinding Oil
GOODSON Reference No. VGO-10 / VGO-50 Valve Grinding Oil
Product Code: None

2. COMPOSITION, INFORMATION ON INGREDIENTS

Component(s) CAS # PEL TLV STEL %Wt.
Hydrotreated Light Naphthenic Base Oil 647-12-53-6 5 mg/m$_3$ 8hrs 5 mg/m$_3$ 8hrs 10 mg/m$_3$ 10hrs 100 approx.

3. HAZARDS INFORMATION

Hazards Rating: Health 1, Fire 1, Reactivity 0
EMERGENCY OVERVIEW: May cause mild skin irritation and inflammation following extended contact! Avoid skin contact. Wash thoroughly after handling.

POTENTIAL HEALTH EFFECTS

Eye: No irritation is expected from short-term exposure.
Skin: Mild skin irritation may occur upon short-term exposure.
Ingestion: No significant adverse health effects are expected to occur under normal conditions of use.
Inhalation: Exposure to petroleum mist at high levels may be irritating to the nose, throat and lungs. Aspiration into lungs may cause lipoid pneumonia.

POTENTIAL HEALTH EFFECTS

Chronic (Cancer) Information: Prolonged and repeated contact may produce mild to moderate irritation and inflammation.
Teratology (Birth Defect) Information: None known
Reproductive Information: None known

4. FIRST AID MEASURES

FIRST AID PROCEDURES
Eyes: Flush eyes with clean, low-pressure water for at least 15 minutes, occasionally lifting the eyelids. If pain or redness persists after flushing obtain medical attention.
Skin: Remove by wiping, the wash skin thoroughly with plenty of soap and water. Remove contaminated clothing and thoroughly clean before reuse. Discard contaminated leather gloves and shoes.
Ingestion: If more than a half-cup full of this material is swallowed, give quantities of water, do not induce vomiting, & obtain medical attention.
Inhalation: Vaporization is not expected at ambient temperatures and this material is not expected to be an inhalation problem under anticipated conditions of use. In case of overexposure, move person to fresh air.
NOTE TO PHYSICIANS: Supportive care. Treatment based on judgment of the physician response to reactions of the patient. May aggravate pre-existing respiratory conditions.

5. FIRE FIGHTING MEASURES

Flash Point: 270℉ Method: ASTM D92
Flammable limits in air: Lower Flammable Limit: - 1.0 Upper Flammable Limit - 7.0
Autoignition Temperature: 600℉
Hazardous Combustion Products: Burning or excessive heating may produce carbon monoxide and other harmful gasses/vapors.
Extinguishing Media: Dry chemical and carbon dioxide. Foam and water fog are effective, but may cause frothing.
Fire Fighting Instructions: COMBUSTIBLE! OSHA/NFPA CLASS IIIB COMBUSTIBLE LIQUID. For fires involving this material, do not enter any enclosed or confined fire space without proper protective equipment.

This may include self-contained breathing apparatus to protect against the hazardous effects of combustion products and oxygen deficiencies. If firefighters cannot work upwind to the fire, respiratory protective equipment must be worn. Cool tanks and containers exposed to fire with water.

6. ACCIDENTAL RELEASE MEASURES

Small Spill: Absorb spill with an inert material (e.g. dry sand or earth), then place in a chemical waste container.
Large Spill: Contain spill and prevent it from entering all water bodies, if possible. Safely stop flow of spill. Evacuate non-essential personnel from immediate spill area due to slipping hazards. In urban area, cleanup as soon as possible; In natural environments, cleanup on advice from ecologists. This material will float on water. Absorbent materials and pads can be used. Comply with all applicable laws. Spills may need to be reported to the National Response Center (800-424-8802).

7. HANDLING AND STORAGE

Handling: Keep away from heat, sparks and flame. Use of oil impervious gloves recommended.
Storage: KEEP OUT OF REACH OF CHILDREN! To avoid product degragation, water contamination should be avoided and minimum feasible handling temperatures should be maintained. Periods of exposure to high temperatures (GT 150℉) should be minimized. Produc t degradation might increase health hazard risks.
Storage Temperatures: Ambient Storage Pressure: Atmospheric

8. EXPOSURE CONTROLS / PERSONAL PROTECTION

Engineering Controls: Use adequate ventilation to keep oil mists of this material below applicable guideline(s) / standard(s).
Respiratory Protection: None is needed under anticipated use conditions with adequate ventilation. If exposure exceeds the occupational exposure limits, follow OSHA standards or equivalent and wear proper NIOSH/MSHA approved respiratory equipment.
Avoid prolonged and/or repeated skin contact, or wear impervious protective clothing. When leaving work, wash hands / exposed skin with soap and water.

Complies with OSHA's Hazard Communication
Standard 29 CFR 1910.1200.

Eye Protection: Wear eye protection. In the likelihood of splashing or spraying, and especially if material is hot (GT 100℉), wear goggles and/or face shield. Ey e wash water should be available. Hard contact lenses must not be worn.

9. PHYSICAL AND CHEMICAL PROPERTIES (TYPICAL)

Slightly Yellow Boiling Point: GT 455℉ Odor: Slight petroleum
Solubility in Water: Negligible Physical State: Liquid Specific Gravity: 0.87 - 0.90
Vapor Pressure: 0.1 mmHg at 70℉ Vapor Density: Not determined Per cent Volatile: Negligible Viscosity SUS @ 100℉: 55-65 (2.3 cSi @100℃)

10. STABILITY AND REACTIVITY

Chemical Stability (Conditions to Avoid): Stable - avoid extreme heat and open flame.
Incompatibility: Strong acids, alkalis and oxidizers such as liquid chlorine and oxygen.
Hazardous Decomposition Products: Carbon Monoxide and other harmful gases / vapors.

11. TOXICOLOGICAL INFORMATION

No specific information is available in our data base regarding the chronic toxic effects of this material for humans.
60 Pale Base Oil (Severely Hydrotreated Light Naphthenic Distillate)
GAS (LC50): Acute: 6.9 mg/L (Female Rat)
GAS (LC50): Acute: 10.5 mg/L (Male Rat)
Oral (LD50): Acute: GT 5,000 mg/kg (Rat screen level)
Dermal (LD50): Acute: GT 2,000 mg/kg (Rat screen level)
Draize Eye: Acute: Non-irritating (Rabbit)
Buehler Dermal: Acute: Mild skin irritant (Rabbit)
28-Day Dermal: Sub-Chronic to moderate skin irritant (Rabbit & Rat)

Mutagenicity: Modified Ames Assay - Negative (Salmonella) In-vitro SCE Ovary Assay - Negative (Chinese Hamster) In-vitro Lymphoma Assay - Positive (Mouse) The International Agency for Research on Cancer (IARC), one of the Occupational Safety and Health Association's (OSHA) authorities for establishing carcinogenic potential, has specifically evaluated Naphthenic Oils. IARC found that mildly hydrotreated (hydrofinished) naphthenic oils are carcinogenic to laboratory animals. IARC has NOT found severely hydrotreated naphthenic oils to be carcinogenic. This product is classified as severely (not mildly) hydrotreated under both IARC and OSHA definitions. A lifetime dermal application of this oil produce skin masses on mice which correlated with the skin irritation response levels of individual test animals. Additional studies attribute these masses to a weak promotional activity. These studies also showed that this product is not a mutagen, not a tumor initiator, and not a complete chemical carcinogen. Under normal anticipated condition of use, this product should not present a risk to human health.

12. ECOLOGICAL INFORMATION

Ecotoicological Information: The spilled material and any soil or water which it has contaminated may be hazardous to animal/aquatic life.
Chemical Fate Information: See Section 13.

13. DISPOSAL CONSIDERATIONS

Maximize product recovery for reuse or recycling. Conditions of use may cause this material to become a “Hazardous Waste”, as defined by state or federal laws. Use approved treatment, transporters and disposal sites in compliance with all applicable laws.
If spill is introduced into a waste water treatment system, chemical and biological oxygen demand will likely increase.
Spill material is biodegradable if gradually exposed to microorganisms. Potential treatment and disposal methods include land farming, incineration and land disposal, if permitted.

14. TRANSPORTATION

DOT Hazardous Materials Proper Shipping Name: Not a DOT “Hazardous Material”
DOT Hazard Class: Not regulated
UN/NAID No.: Not regulated/Not applicable

15. REGULATORY INFORMATION

SUPERFUND AMENDMENTS & REAUTHORIZATION ACT OF 1986 (SARA), TITLE III
Section 311/312 Hazard Categories: Immediate (Acute) and delayed (Chronic) Health Hazards
Section 302, 304: None of the chemicals in the product exceed the minimum reporting level under this statute.
Toxic Substances Control Act (TSCA): All components of this product are listed on the TSCA inventory.
Comprehensive Environmental Response, Compensation & Liability Act (CERCLA): No chemicals in this product are subject to the reporting requirements of CERCLA.
California Safe Drinking Water & Toxic Enforcement Act of 1986 - Proposition 65: Based on information currently available, this product is not known to contain any chemicals currently listed as carcinogens or reproductive toxins under California Proposition 65 at levels which would be subject to the proposition. If you reformulate or further process this product, you should further evaluate this product based upon such reformation or processing, as well as upon its final composition and use.

16. OTHER INFORMATION

Disclaimer of Liability: The information in this MSDS was obtained from sources which we believe are reliable. However, the information is provided without any warranty, express or implied, regarding its correctness. The conditions or methods of handling, storage, use and disposal of the product are beyond our control and may be beyond our knowledge. For this and other reasons, we do not assume responsibility and expressly disclaim liability for loss, damage or expense arising out of or in any way connected with the handling, storage, use or disposal of this product. This MSDS was prepared and is to be used only for this product. If the product is used as a component in another product, this MSDS information may not be applicable.

SECTION VIII – SPECIAL PROTECTION INFORMATION

Respiratory Protection (specify type) None
VENTILATION: Local Exhaust (specify rate) Special _ Not normally required None _ Mechanical (general) (specify rate) Other _ General room ventilation should be sufficient. None
Protective Gloves (specify type) Eye Protection (specify type) None Safety glasses
Other Protective Equipment None

SECTION IX – SPECIAL PRECAUTIONS

Precautions to be Taken in Handling and Storing Keep container closed. Wash thoroughly after handling.
Other Precautions None